Listing of Requested Exceptions / Waivers

In accordance with Section 2.E.8 of the Town of Hingham Rules and Regulations for Comprehensive Permits and Section 56.05(2)(a) and (f) of the Chapter 40B Regulations, a list of requested exceptions to local requirements, codes, bylaws, and regulations is provided herein.

Zoning Requirements - Industrial District			
Criteria	**Required**	**Proposed**	**Waiver Required**
Zoning By-Law §III – Schedule of Uses (Subsection **1.4**) and all provisions of IV-E, Multi-Unit Development	Apartment House is subject to the provisions of IV-E, Multi-Unit Development, and is prohibited in Industrial District	Project as shown on Plan.	X
Zoning By-Law §V-A – Minimum Lot Area	80,000 s.f.	163,753 s.f.	
Zoning By-Law §V-A – Minimum Lot Frontage	200 ft.	160.27 ft. and 103.56 ft. Lincoln St.	X
Zoning By-Law §V-A – Maximum Stories	3	5	X
Zoning By-Law §V-A – Maximum Building Coverage	40%	64.2%	X
Zoning By-Law §V-A – Maximum Floor Area Ratio	0.35[1]	1.55	X
Zoning By-Law §V-A – Minimum Front Yard	40 ft.	82.6 ft. Lincoln St.	
Zoning By-Law §V-A – Minimum Side Yard	25 ft.	16.1 ft.	X
Zoning By-Law §V-A – Minimum Rear Yard	25 ft.	34 ft.	X
Zoning By-Law §IV-B.1 – Special Requirements to Schedule of Dimension Requirements	No building, structure, parking area, or septic system shall be constructed within 100 ft. of a residence district.	Building will be constructed within 100 ft. of a residence district.	X
General By-Laws Article 10 §12	Permit required to break the surface of/dig up a sidewalk or other part of a public way.	Current plan includes new utility service connections in Route 3A and improvements at the intersection of Route 3A and USS Amesbury Drive.	X

Note:
1. 0.50 Allowed by Special Permit A2.

Off-Street Parking Requirements			
Criteria	**Required**	**Proposed**	**Waiver Required**
Zoning By-Law § V-A.3 – Residential Use	2 spaces/unit	1.57 spaces/unit	X
Zoning By-Law § V-A.3 – Standard Parking Spaces	Width 9 ft. Length 18 ft. with overhang 20 ft. without overhang	Width 9 ft. Length 18 ft. without overhang	X
Zoning By-Law § V-A.3 – Loading Spaces	Width 12 ft. Height Clearance 14 ft.	Width 10 ft. Height clearance N/A	X

AVALON HINGHAM SHIPYARD II

319 LINCOLN STREET
HINGHAM, MA

COMPREHENSIVE PERMIT APPLICATION

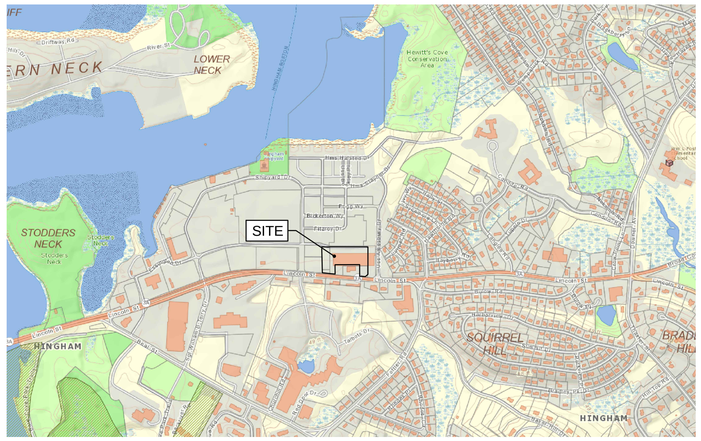

LOCUS MAP
1"=1000'

OWNER/APPLICANT

HINGHAM SHIPYARD AVALON II INC.
51 SLEEPER STREET, SUITE 750
BOSTON, MA 02210

PROJECT TEAM

ARCHITECT:

THE ARCHITECTURAL TEAM
50 COMMANDANT'S WAY
AT ADMIRAL'S HILL
CHELSEA, MA 02150

CIVIL ENGINEER:

HOWARD STEIN HUDSON
11 BEACON STREET
SUITE 1010
BOSTON, MA 02108

SHEET INDEX

SHEET C0.00	COVER SHEET
SHEET 1	PLOT PLAN
SHEET 2	PLOT PLAN
SHEET C1.00	PRELIMINARY LAYOUT AND MATERIALS PLAN
SHEET C2.00	SIGNAGE AND PAVEMENT MARKINGS PLAN
SHEET C3.00	PRELIMINARY GRADING AND UTILITIES PLAN
SHEET C4.00	SITE DETAILS
SHEET C4.01	SITE DETAILS
SHEET C4.02	SITE DETAILS
SHEET A1.01	GROUND FLOOR PLAN
SHEET A1.02	SECOND FLOOR PLAN
SHEET A1.03	THIRD FLOOR PLAN
SHEET A1.04	FOURTH FLOOR PLAN
SHEET A1.05	FIFTH FLOOR PLAN
SHEET A4.01	EXTERIOR ELEVATIONS
SHEET A4.02	EXTERIOR PERSPECTIVE VIEW
SHEET A4.03	EXTERIOR PERSPECTIVE VIEW
SHEET A5.01	BUILDING SECTIONS
SHEET L1	CONCEPTUAL ENTRANCE LANDSCAPE PLAN

BUILDING UNIT MIX			
TYPE	AVERAGE UNIT SIZE	NUMBER OF MARKET RATE UNITS	NUMBER OF AFFORDABLE UNITS
1 BEDROOM/1 BATH	783 SF	50	17
2 BEDROOM/2 BATH	1,229 SF	78	26
3 BEDROOM/2 BATH	1,308 SF	14	5
	TOTAL UNITS	142	48

HOWARD STEIN HUDSON
11 Beacon Street, Suite 1010
Boston, MA 02108
www.hshassoc.com

PREPARED FOR:

HINGHAM SHIPYARD AVALON II INC
51 SLEEPER STREET, SUITE 750
BOSTON, MA 02210

AVALON HINGHAM SHIPYARD II
319 LINCOLN STREET
HINGHAM, MA 02043
PLYMOUTH COUNTY

REVISIONS:

NO	BY	DATE	DESCRIPTION
1	HH	2/25/16	SUPPLEMENTAL INFO
2	HH	3/30/16	SUPPLEMENTAL INFO

COMPREHENSIVE PERMIT APPLICATION

COVER

DATE:	2/12/2016
PROJECT NUMBER:	15151
DESIGNED BY:	HH
DRAWN BY:	HV
CHECKED BY:	RL

C0.00

3/30/2016 I:\15151\Current\Cad\sheets\Cover.dwg

N

NAD 83

N/F
AVALON SHIPYARD LLC
#111 FITZROY DRIVE
MAP 36 LOT 160
DEED 32846/112

N/F
AVALON SHIPYARD LLC
#152 SHIPYARD DRIVE
MAP 36 LOT 159
DEED 32846/112

N/F
BRIGHT HORIZONS
CHILDRENS CENTER
#168 SHIPYARD DRIVE
MAP 36 LOT 163
DEED 38890/59

N/F
BUILDING 19 REALTY TRUST
#319 LINCOLN STREET
MAP 36 LOT 104
CERTIFICATE #61141
LCC 14401 H, LOT 7
CERTIFICATE #190502

EXISTING BUILDING
2 STORY WOOD FRAME
LOT AREA= 163,760± SQ. FT.
BUILDING FLOOR AREA= 80,219± SQ. FT. (INCLUDES LOADING DOCKS)
BUILDING FLOOR AREA= 75,585± SQ. FT. (EXCLUDES LOADING DOCKS)
(LOADING DOCKS ARE ENCLOSED AND APPEAR TO BE PART OF BUILDING)

N/F
HINGHAM SHIPYARD LLC
#315 LINCOLN STREET
MAP 36 LOT 105
CERTIFICATE #89825
DOC #397694

N/F
HEWITTS COVE MARINA, LLC
#150 SHIPYARD DRIVE
MAP 36 LOT 161
DEED 29868/302

"COMMON ROADWAY" (PRIVATE)

USS AMESBURY DRIVE

LINCOLN STREET

(ROUTE 3A PUBLIC VARIABLE WIDTH)

(2006 STATE HIGHWAY ALTERATION LAYOUT No. 8008)

2006 SHLO LO. NO. 8008

STATE HIGHWAY BASELINE

ENCLOSED LOADING DOCK (CONC. PIERS)
LIMIT OF MAIN BUILDING

ENCROACHMENT EASEMENT
PORTION OF BUILDING ATTACHMENTS
APPENDAGES & UTILITY LINES
LC DOCUMENT 620393 & 190501

WATER EASEMENT
LC DOCUMENT 190503
(UTILITY EASEMENT)

20' WIDE DRAINAGE & SEWER EASEMENT
DEED BOOK 5147, PAGE 460 &
LAND COURT DOC. NO. 212223
(BY GRAPHIC PLOTTING ONLY)
(UTILITY EASEMENT)

20' WIDE SEWER EASEMENT
(BY GRAPHIC PLOTTING ONLY)

RECIPROCAL PARKING EASEMENT
DEED 27395/22-67
LC DOCUMENT 557377
EXHIBIT F
BENEFITING HCM MARINA LLC
&
BUILDING #19 REALTY TRUST

BUILDING 19
ACCESS EASEMENT #2
BOOK 27395/22-67
DOCUMENT 557377
EXHIBIT B
BENEFITING BUILDING #19 REALTY TRUST

BUILDING 19
ACCESS EASEMENT #C-1
BOOK 27395/22-67
DOCUMENT 557377
EXHIBIT C
BENEFITING HCM MARINA LLC

ESMT. ALONG WATER LINE

CONT. ON SHEET 2

NOTES:

1) LOT IS ZONED: INDUSTRIAL

2) FLOOD PLAIN IS BY GRAPHIC PLOTTING ONLY, THIS PROPERTY IS LOCATED IN ZONE "X" OF THE FLOOD INSURANCE RATE MAP, AS SHOWN ON COMMUNITY PANEL No. 250268 0018J, WHICH BEARS AN EFFECTIVE DATE OF JULY 17, 2012, AND IS NOT IN A SPECIAL FLOOD HAZARD AREA.

REVISIONS		
REV.	COMMENTS	DATE

0 20 50 100
SCALE: 1" = 20'

ORIGINAL FULL SIZE DRAWING=4"
REPRODUCTIONS MAY BE REDUCED SIZE

PREPARED BY:
A-PLUS CONSTRUCTION SERVICES CORPORATION
17 ACCORD PARK DRIVE, UNIT 102 NORWELL, MASS.
TEL. (781 681-6667 FAX. (781) 681-6673

FIELD CHIEF: BL	DES/COMP: JW	DRAFTED BY: JW	CHECKED BY: MC
DATE: FEBRUARY 25, 2015	SCALE: 1"=20'	JOB#: 3566	FILE: 319_LINCOLN.DWG

COMMONWEALTH OF MASSACHUSETTS
MICHAEL A COLEMAN No. 37042
REGISTERED LAND SURVEYOR

PLOT PLAN OF LAND
319 LINCOLN STREET
HINGHAM, MA

PREPARED FOR:
HOWARD/STEIN-HUDSON ASSOCIATES INC

SHEET
1 of 2
OF
REV 0.0

NOTES:

1) LOT IS ZONED: INDUSTRIAL

2) FLOOD PLAIN IS BY GRAPHIC PLOTTING ONLY, THIS PROPERTY IS LOCATED IN ZONE "X" OF THE FLOOD INSURANCE RATE MAP, AS SHOWN ON COMMUNITY PANEL No. 250268 0018J, WHICH BEARS AN EFFECTIVE DATE OF JULY 17, 2012, AND IS NOT IN A SPECIAL FLOOD HAZARD AREA.

0 20 50 100

SCALE: 1" = 20'

REVISIONS		
REV.	COMMENTS	DATE

ORIGINAL FULL SIZE DRAWING=4"

REPRODUCTIONS MAY BE REDUCED SIZE

PREPARED BY:
A-PLUS CONSTRUCTION SERVICES CORPORATION
17 ACCORD PARK DRIVE, UNIT 102 NORWELL, MASS.
TEL. (781) 681-6667 FAX. (781) 681-6673

FIELD CHIEF: BL	DES/COMP: JW	DRAFTED BY: JW	CHECKED BY: MC
DATE: FEBRUARY 25, 2015	SCALE: 1"=20'	JOB#: 3566	FILE: 319_LINCOLN.DWG

COMMONWEALTH OF MASSACHUSETTS
MICHAEL A COLEMAN No. 37042
REGISTERED PROFESSIONAL LAND SURVEYOR

PLOT PLAN OF LAND
319 LINCOLN STREET
HINGHAM, MA

PREPARED FOR:
HOWARD/STEIN-HUDSON ASSOCIATES INC

SHEET 2 of 2 OF

REV 0.0

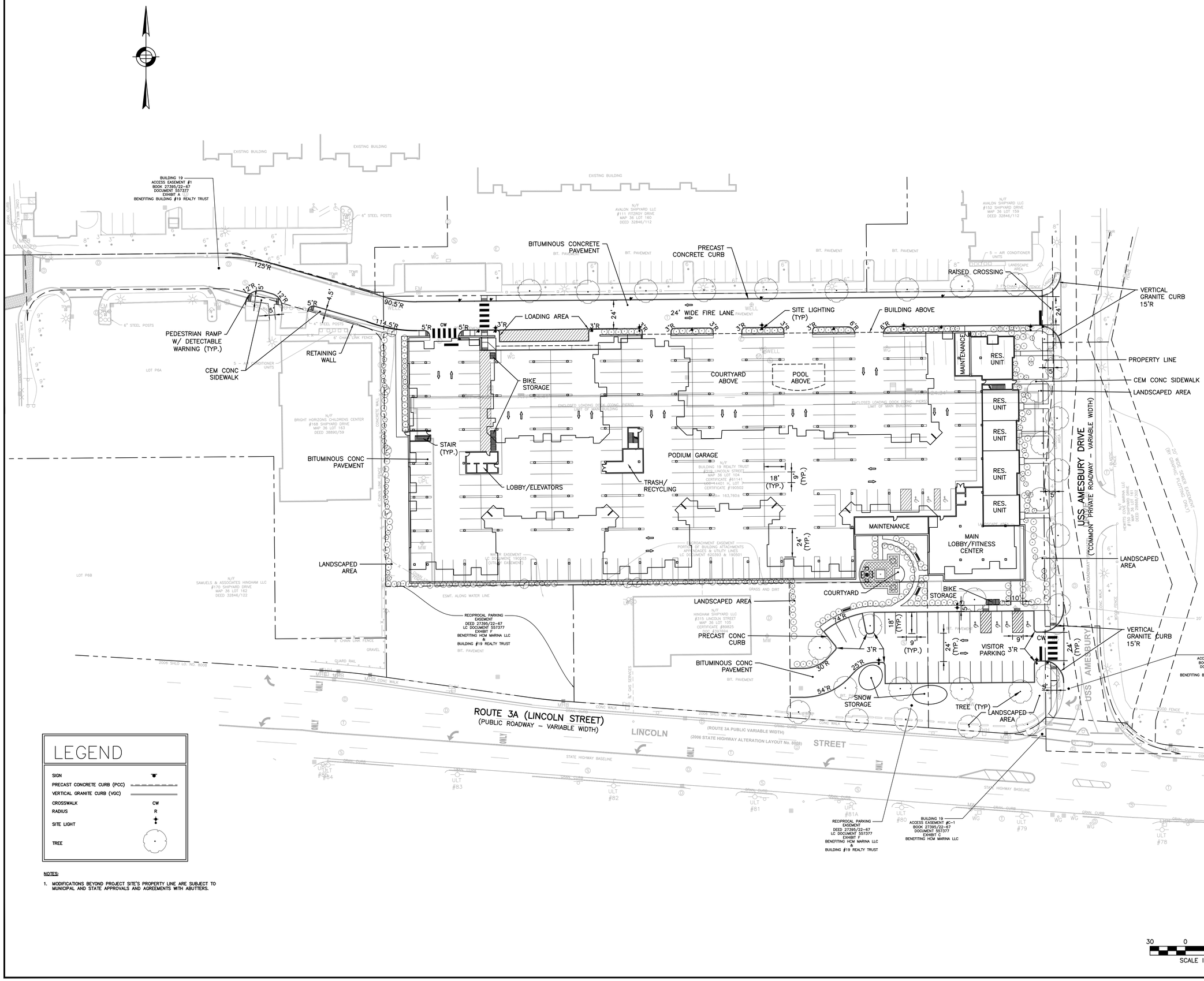

LEGEND

- SIGN
- PRECAST CONCRETE CURB (PCC)
- VERTICAL GRANITE CURB (VGC)
- CROSSWALK — CW
- RADIUS — R
- SITE LIGHT
- TREE

NOTES:

1. MODIFICATIONS BEYOND PROJECT SITE'S PROPERTY LINE ARE SUBJECT TO MUNICIPAL AND STATE APPROVALS AND AGREEMENTS WITH ABUTTERS.

30 0 30 60
SCALE IN FEET

HOWARD STEIN HUDSON
11 Beacon Street, Suite 1010
Boston, MA 02108
www.hshassoc.com

PREPARED FOR:

HINGHAM SHIPYARD AVALON II INC
51 SLEEPER STREET, SUITE 750
BOSTON, MA 02210

AVALON HINGHAM SHIPYARD II

319 LINCOLN STREET
HINGHAM, MA 02043
PLYMOUTH COUNTY

REVISIONS:

NO	BY	DATE	DESCRIPTION
1	HH	2/25/16	SUPPLEMENTAL INFO
1	HH	3/30/16	SUPPLEMENTAL INFO

COMPREHENSIVE PERMIT APPLICATION

PRELIMINARY LAYOUT AND MATERIALS PLAN

DATE:	2/12/16
PROJECT NUMBER:	2015151
DESIGNED BY:	HH
DRAWN BY:	HH
CHECKED BY:	RL

C1.00

3/30/2016 L:\2015151\Civil\Sheets\Layout Plan.dwg

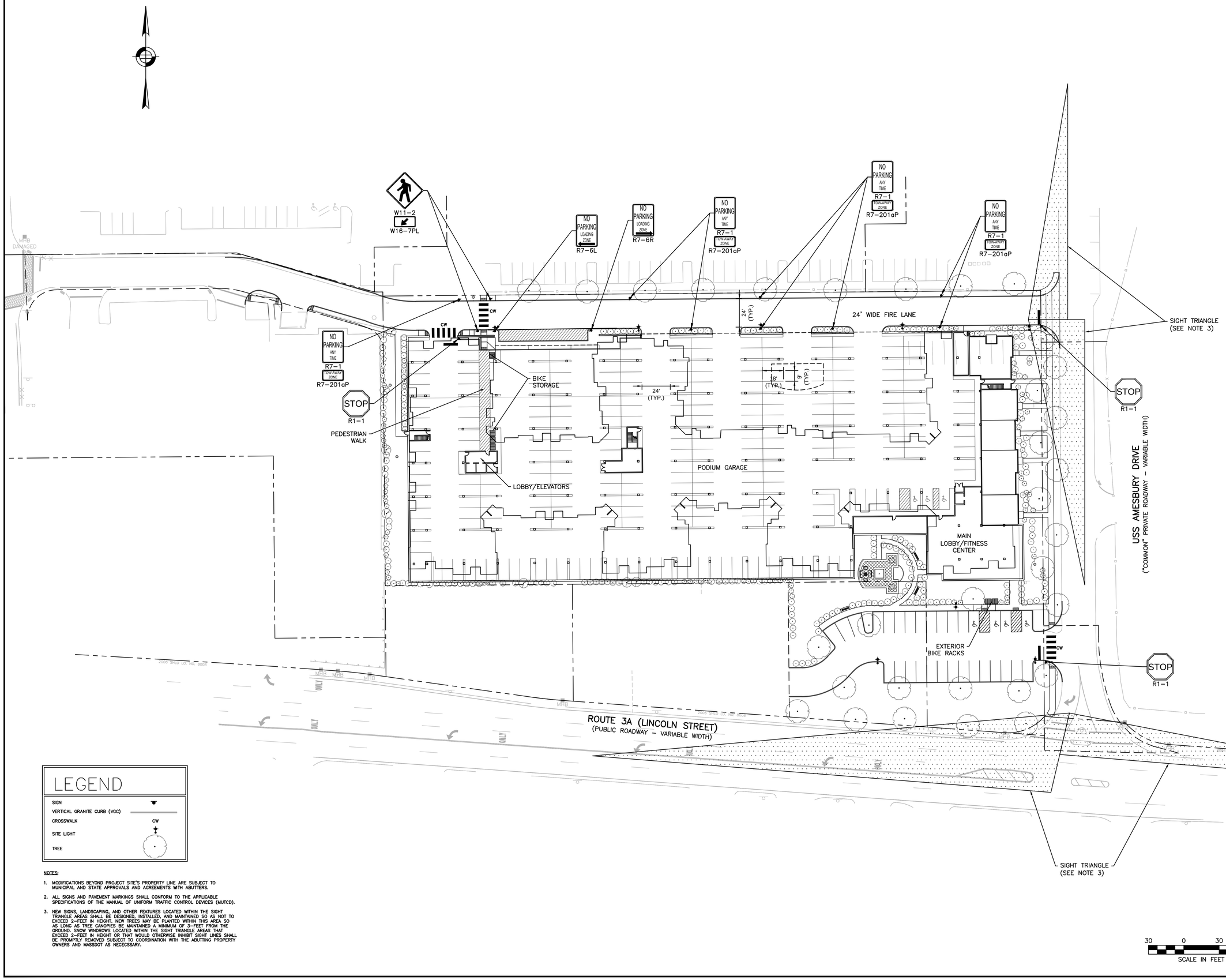

LEGEND

- SIGN
- VERTICAL GRANITE CURB (VGC)
- CROSSWALK — CW
- SITE LIGHT
- TREE

NOTES:

1. MODIFICATIONS BEYOND PROJECT SITE'S PROPERTY LINE ARE SUBJECT TO MUNICIPAL AND STATE APPROVALS AND AGREEMENTS WITH ABUTTERS.
2. ALL SIGNS AND PAVEMENT MARKINGS SHALL CONFORM TO THE APPLICABLE SPECIFICATIONS OF THE MANUAL OF UNIFORM TRAFFIC CONTROL DEVICES (MUTCD).
3. NEW SIGNS, LANDSCAPING, AND OTHER FEATURES LOCATED WITHIN THE SIGHT TRIANGLE AREAS SHALL BE DESIGNED, INSTALLED, AND MAINTAINED SO AS NOT TO EXCEED 2-FEET IN HEIGHT. NEW TREES MAY BE PLANTED WITHIN THIS AREA SO AS LONG AS TREE CANOPIES BE MAINTAINED A MINIMUM OF 3-FEET FROM THE GROUND. SNOW WINDROWS LOCATED WITHIN THE SIGHT TRIANGLE AREAS THAT EXCEED 2-FEET IN HEIGHT OR THAT WOULD OTHERWISE INHIBIT SIGHT LINES SHALL BE PROMPTLY REMOVED SUBJECT TO COORDINATION WITH THE ABUTTING PROPERTY OWNERS AND MASSDOT AS NECECSSARY.

30 0 30 60
SCALE IN FEET

3/30/2016 L:\15151\Current\Cadsheets\Signage and Pavement Markings Plan.dwg

HOWARD STEIN HUDSON
11 Beacon Street, Suite 1010
Boston, MA 02108
www.hshassoc.com

PREPARED FOR:

HINGHAM SHIPYARD AVALON II INC
51 SLEEPER STREET, SUITE 750
BOSTON, MA 02210

AVALON HINGHAM SHIPYARD II

319 LINCOLN STREET
HINGHAM, MA 02043
PLYMOUTH COUNTY

REVISIONS:

NO	BY	DATE	DESCRIPTION

COMPREHENSIVE PERMIT APPLICATION

SIGNAGE AND PAVEMENT MARKING PLAN

DATE:	3/30/16
PROJECT NUMBER:	2015151
DESIGNED BY:	ML
DRAWN BY:	ML
CHECKED BY:	RL

C2.00

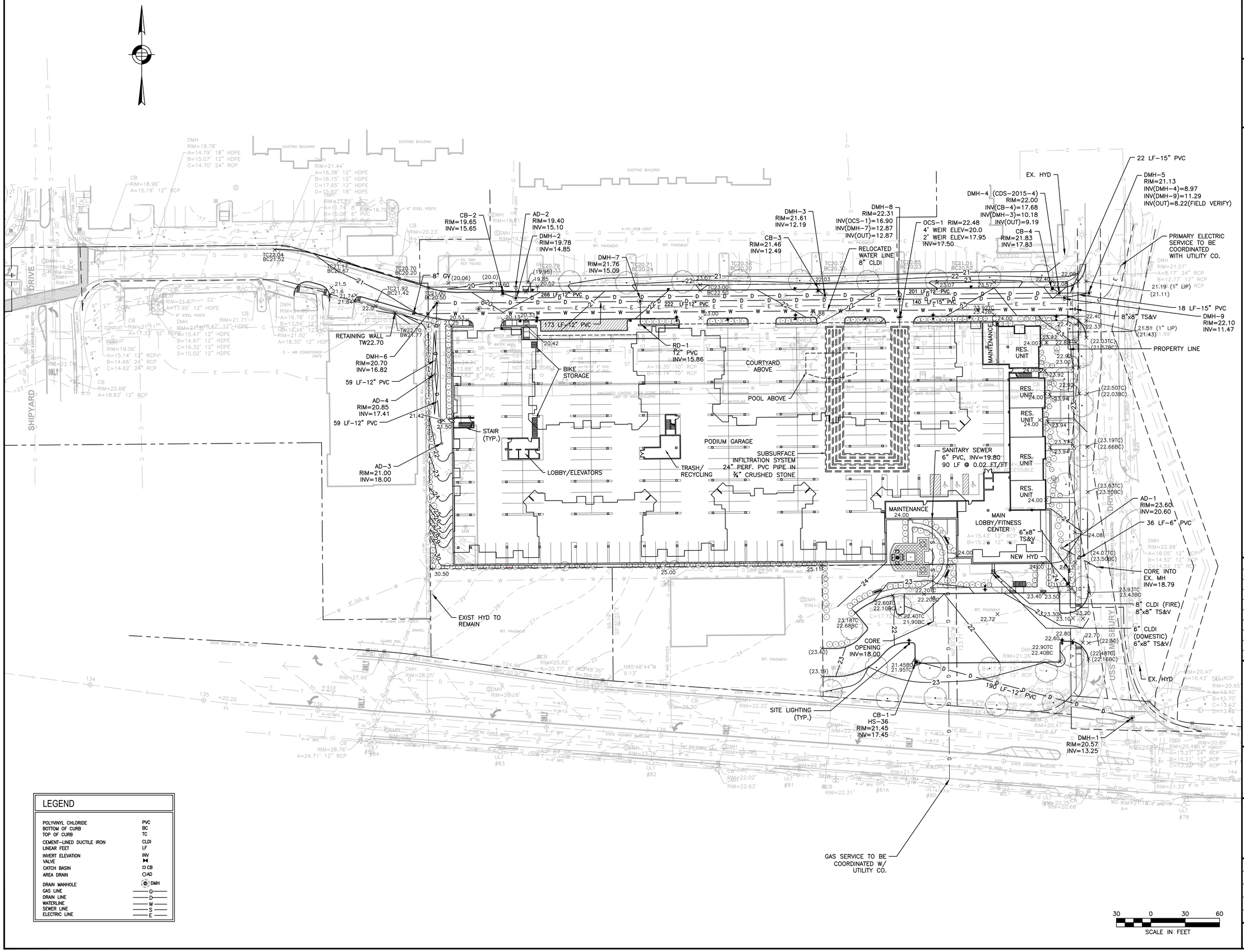

LEGEND

POLYVINYL CHLORIDE	PVC
BOTTOM OF CURB	BC
TOP OF CURB	TC
CEMENT-LINED DUCTILE IRON	CLDI
LINEAR FEET	LF
INVERT ELEVATION	INV
VALVE	⋈
CATCH BASIN	⊡ CB
AREA DRAIN	○ AD
DRAIN MANHOLE	DMH
GAS LINE	G
DRAIN LINE	D
WATERLINE	W
SEWER LINE	S
ELECTRIC LINE	E

HOWARD STEIN HUDSON
11 Beacon Street, Suite 1010
Boston, MA 02108
www.hshassoc.com

PREPARED FOR:

HINGHAM SHIPYARD AVALON II INC
51 SLEEPER STREET, SUITE 750
BOSTON, MA 02210

AVALON HINGHAM SHIPYARD II

319 LINCOLN STREET
HINGHAM, MA 02043
PLYMOUTH COUNTY

REVISIONS:

NO	BY	DATE	DESCRIPTION
1	HH	2/25/16	SUPPLEMENTAL INFO
2	HH	3/30/16	SUPPLEMENTAL INFO

COMPREHENSIVE PERMIT APPLICATION

PRELIMINARY GRADING AND UTILITY PLAN

DATE:	2/12/16
PROJECT NUMBER:	2015151
DESIGNED BY:	HH
DRAWN BY:	HH
CHECKED BY:	RL

C3.00

3/30/2016 L:\15151\Current\Cutsheets\GRADING PLAN.dwg

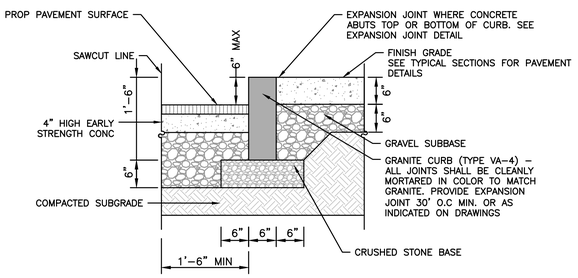

NOTE: USE 2" BIT. CONC. TOP COURSE ABOVE HIGH EARLY STRENGTH CONCRETE FOR RESETTING CURBS

VERTICAL GRANITE CURB
NOT TO SCALE

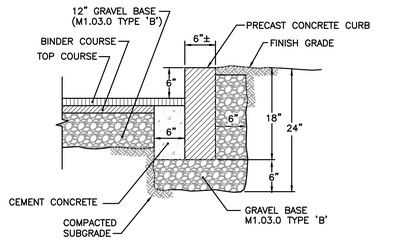

NOTE:
CURBS SHALL BE BACKED UP BY CONCRETE ANCHOR AT ALL JOINTS WHERE NOT ADJACENT TO A SIDEWALK OR OTHER STRUCTURE.

PRECAST CONCRETE CURB
NOT TO SCALE

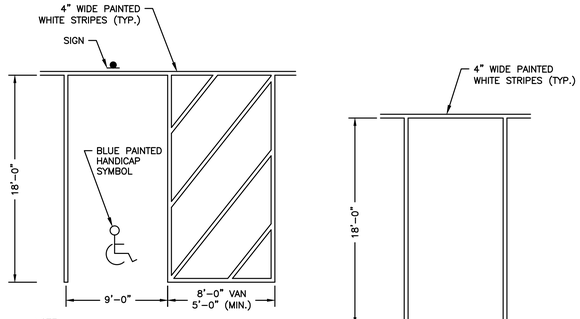

NOTE:
* GRADING WITHIN THE ACCESSIBLE PARKING SPACE SHALL NOT EXCEED 2.0% IN ANY DIRECTION.

TYPICAL ACCESSIBLE PARKING SPACE
NOT TO SCALE

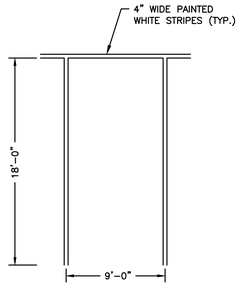

TYPICAL PARKING SPACE
NOT TO SCALE

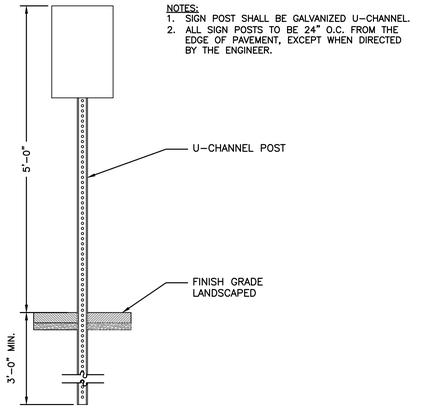

PARKING SIGN
NOT TO SCALE

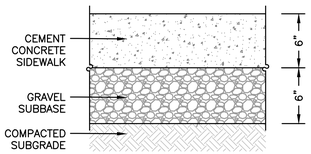

NOTES:

1. CONCRETE SIDEWALK DETAIL AND NOTES APPLY TO SIDEWALK WITHIN THE RIGHT-OF-WAY.
2. CONCRETE SHALL BE 4,000 PSI.
3. SIDEWALKS ARE TO BE RAKED FINISH WITH 3/8 INCH TROWEL JOINTS.

CEM CONC SIDEWALK SECTION DETAIL
NOT TO SCALE

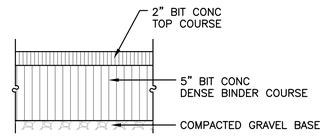

TRENCH PATCH DETAIL
NOT TO SCALE

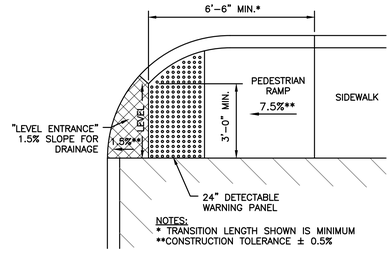

NOTES:
* TRANSITION LENGTH SHOWN IS MINIMUM
**CONSTRUCTION TOLERANCE ± 0.5%

PEDESTRIAN RAMP FOR ONE CONTINUOUS DIRECTION OF PEDESTRIAN TRAVEL
NOT TO SCALE

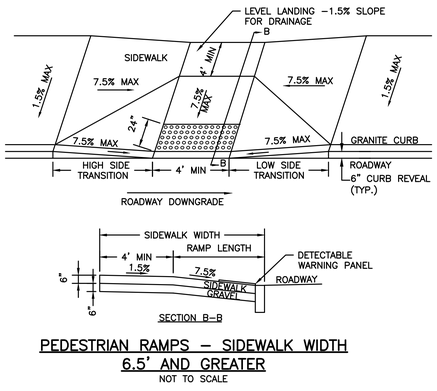

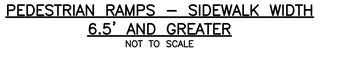

PEDESTRIAN RAMPS - SIDEWALK WIDTH 6.5' AND GREATER
NOT TO SCALE

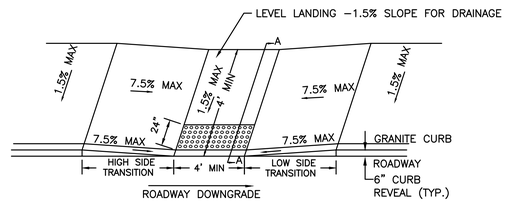

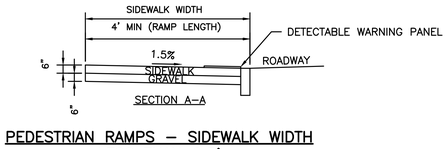

PEDESTRIAN RAMPS - SIDEWALK WIDTH LESS THAN 6.5'
NOT TO SCALE

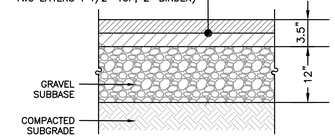

FULL DEPTH PARKING LOT SECTION DETAIL
NOT TO SCALE

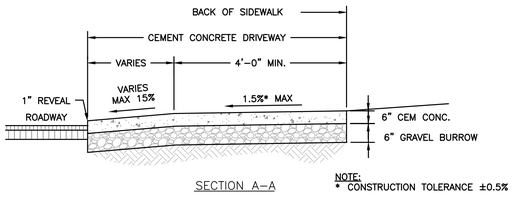

SECTION A-A

NOTE:
* CONSTRUCTION TOLERANCE ±0.5%

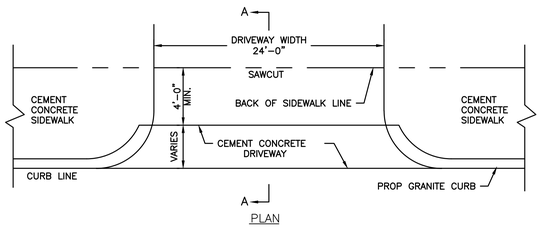

PLAN

DRIVEWAY CONSTRUCTION DETAIL
NOT TO SCALE

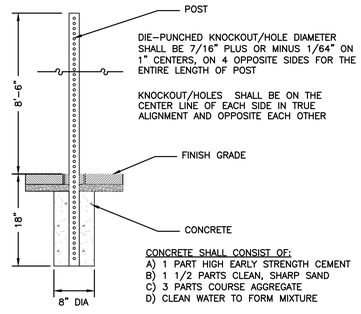

CONCRETE SHALL CONSIST OF:
A) 1 PART HIGH EARLY STRENGTH CEMENT
B) 1 1/2 PARTS CLEAN, SHARP SAND
C) 3 PARTS COURSE AGGREGATE
D) CLEAN WATER TO FORM MIXTURE

10'-2" SQUARE SIGN POST
NOT TO SCALE

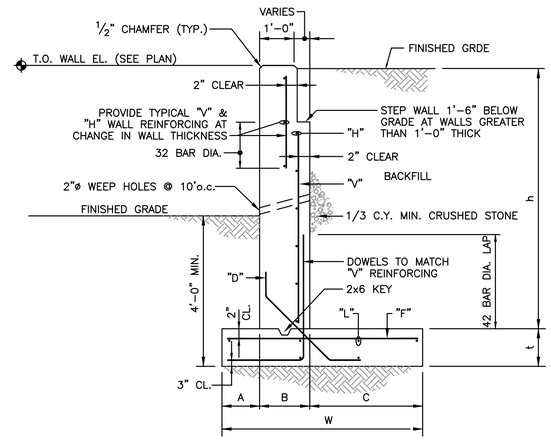

DIMENSIONS						REINFORCING				
h	A	B	C	W	t	V	H	F	L	D
6' ≤	8"	1'-0"	2'-6"	4'-2"	1'-0"	#5@12"	#5@10"	#5@12"	5-#5	#4@12"
6' TO 12'	1'-9"	1'-3"	5'-5"	8'-5"	1'-3"	#6@8"	#6@12"	#5@8"	9-#5	#4@8"

NOTES:
1. IN-BETWEEN DIMENSIONS MUST ALWAYS BE ROUNDED UP.
2. CAST-IN-PLACE CONCRETE WALL SHALL HAVE A SMOOTH FORM FINISH.

CAST-IN-PLACE CONCRETE RETAINING WALL
NOT TO SCALE

HOWARD STEIN HUDSON
11 Beacon Street, Suite 1010
Boston, MA 02108
www.hshassoc.com

PREPARED FOR:

AVALONBAY COMMUNITIES, INC.
51 SLEEPER STREET, SUITE 750
BOSTON, MA 02210

AVALON HINGHAM SHIPYARD II
319 LINCOLN STREET
HINGHAM, MA 02043
PLYMOUTH COUNTY

REVISIONS:

NO	BY	DATE	DESCRIPTION
1	HH	2/25/16	SUPPLEMENTAL INFO
2	HH	3/30/16	SUPPLEMENTAL INFO

COMPREHENSIVE PERMIT APPLICATION

PRELIMINARY SITE DETAILS

DATE:	2/12/16
PROJECT NUMBER:	2015151
DESIGNED BY:	HH
DRAWN BY:	HH
CHECKED BY:	RL

C4.00

3/30/2016 L:\15151\Current\Cust\Sheets\Site Details.dwg

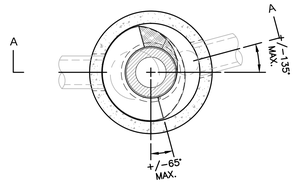

PLAN VIEW

FRAME AND COVER

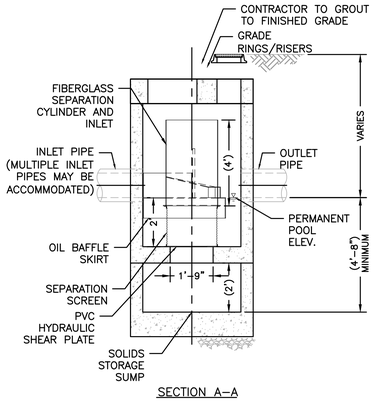

SECTION A–A

GENERAL NOTES
1. CDS2015–4 RATED TREATMENT CAPACITY IS 1.4 CFS. MAXIMUM HYDRAULIC INTERNAL BYPASS CAPACITY IS 10.0 CFS.
2. CONTECH TO PROVIDE ALL MATERIALS UNLESS NOTED OTHERWISE.
3. DIMENSIONS MARKED WITH ( ) ARE REFERENCE DIMENSIONS. ACTUAL DIMENSIONS MAY VARY.
4. FOR FABRICATION DRAWINGS WITH DETAILED STRUCTURE DIMENSIONS AND WEIGHTS, PLEASE CONTACT YOUR CONTECH STORMWATER SOLUTIONS REPRESENTATIVE. www.contechstormwater.com
5. CDS WATER QUALITY STRUCTURE SHALL BE IN ACCORDANCE WITH ALL DESIGN DATA AND INFORMATION CONTAINED IN THIS DRAWING.
6. STRUCTURE AND CASTINGS SHALL MEET AASHTO HS20.
7. PVC HYDRAULIC SHEAR PLATE IS PLACED ON SHELF AT BOTTOM OF SCREEN CYLINDER. REMOVE AND REPLACE AS NECESSARY DURING MAINTENANCE CLEANING.

INSTALLATION NOTES
1. ANY SUB–BASE, BACKFILL DEPTH, AND/OR ANTI–FLOTATION PROVISIONS ARE SITE–SPECIFIC DESIGN CONSIDERATIONS AND SHALL BE SPECIFIED BY ENGINEER OF RECORD.
2. CONTRACTOR TO PROVIDE EQUIPMENT WITH SUFFICIENT LIFTING AND REACH CAPACITY TO LIFT AND SET THE CDS MANHOLE STRUCTURE (LIFTING CLUTCHES PROVIDED).
3. CONTRACTOR TO ADD JOINT SEALANT BETWEEN ALL STRUCTURE SECTIONS, AND ASSEMBLE STRUCTURE.
4. CONTRACTOR TO PROVIDE, INSTALL, AND GROUT PIPES. MATCH PIPE INVERTS WITH ELEVATIONS SHOWN.
5. CONTRACTOR TO TAKE APPROPRIATE MEASURES TO ASSURE UNIT IS WATER TIGHT, HOLDING WATER TO FLOWLINE INVERT MINIMUM. IT IS SUGGESTED THAT ALL JOINTS BELOW PIPE INVERTS ARE GROUTED.

WATER QUALITY UNIT – CDS2015–4
NOT TO SCALE

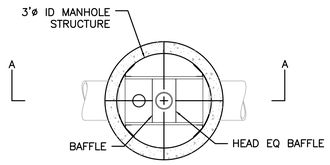

PLAN VIEW

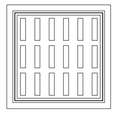

FRAME AND GRATE

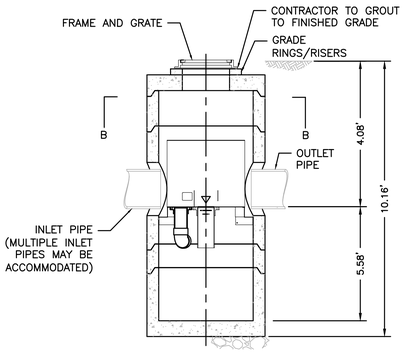

SECTION A–A

GENERAL NOTES
1. CONTECH TO PROVIDE ALL MATERIALS UNLESS NOTED OTHERWISE.
2. FOR FABRICATION DRAWINGS WITH DETAILED STRUCTURE DIMENSIONS AND WEIGHT, PLEASE CONTACT YOUR CONTECH CONSTRUCTION PRODUCTS REPRESENTATIVE. www.contech–cpi.com
3. VORTSENTRY HS WATER QUALITY STRUCTURE SHALL BE IN ACCORDANCE WITH ALL DESIGN DATA AND INFORMATION CONTAINED IN THIS DRAWING.
4. STRUCTURE SHALL MEET AASHTO H20 LOAD RATING. CASTINGS SHALL MEET AASHTO M306, CAST WITH THE CONTECH STORMWATER SOLUTIONS LOGO.

INSTALLATION NOTES
1. ANY SUB–BASE, BACKFILL DEPTH, AND/OR ANTI–FLOTATION PROVISIONS ARE SITE–SPECIFIC DESIGN CONSIDERATIONS AND SHALL BE SPECIFIED BY ENGINEER OF RECORD.
2. CONTRACTOR TO PROVIDE EQUIPMENT WITH SUFFICIENT LIFTING AND REACH CAPACITY TO LIFT AND SET THE VORTSENTRY HS MANHOLE STRUCTURE (LIFTING CLUTCHES PROVIDED).
3. CONTRACTOR TO INSTALL JOINT SEALANT BETWEEN ALL STRUCTURE SECTIONS AND ASSEMBLE STRUCTURE.
4. CONTRACTOR TO PROVIDE, INSTALL, AND GROUT PIPES. MATCH PIPE INVERTS WITH ELEVATIONS SHOWN.
5. CONTRACTOR TO TAKE APPROPRIATE MEASURES TO ASSURE UNIT IS WATER TIGHT, HOLDING WATER TO FLOWLINE INVERT MINIMUM. IT IS SUGGESTED THAT ALL JOINTS BELOW PIPE INVERTS ARE GROUTED.

WATER QUALITY INLET – VORTSENTRY HS36
NOT TO SCALE

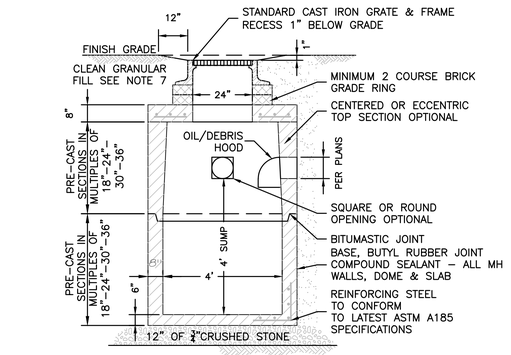

NOTES:
1. BASE SECTION SHALL BE MONOLITHIC WITH 48–INCH INSIDE DIAMETER.
2. ALL SECTIONS SHALL BE DESIGNED FOR HS–20 LOADING.
3. CONCRETE SHALL BE COMPRESSIVE STRENGTH 4000psi TYPE II CEMENT. PRE–CAST REINFORCED CONCRETE SHALL BE ASTM C–478.
4. ALL EXTERIOR SURFACES SHALL BE GIVEN TWO COATS OF BITUMINOUS WATER–PROOFING MATERIAL.
5. STANDARD GRATE & FRAME SHALL BE SET IN FULL MORTAR BED. ADJUST TO GRADE WITH CLAY BRICK AND MORTAR (2 BRICK COURSES TYPICALLY, 5 COURSE MAXIMUM).
6. GRATE AND FRAME SHALL BE LEBARON CAST IRON OR ENGINEER APPROVED EQUAL. ALL GRATES TO BE BICYCLE SAFE.
7. CLEAN GRANULAR FILL SHALL BE FREE FROM FROM ORGANIC MATTER, LARGE STONES, STUMPS, MASONRY, FROZEN EARTH, WOOD, TREE BRANCHES & WASTE CONSTRUCTION MATERIAL. PLACE AND MECHANICALLY COMPACT IN 12" LIFTS TO 95% OF MAX. STANDARD PROCTOR COMPACTION.
8. TRENCH SHEETING & BRACING TO BE SUPPLIED AS REQUIRED.
9. ALL CATCH BASIN OUTLETS TO BE EQUIPPED WITH OIL/DEBRIS SEPARATION HOOD, AS REQUIRED BY CITY/TOWN.

FLAT TOP CATCH BASIN
NOT TO SCALE

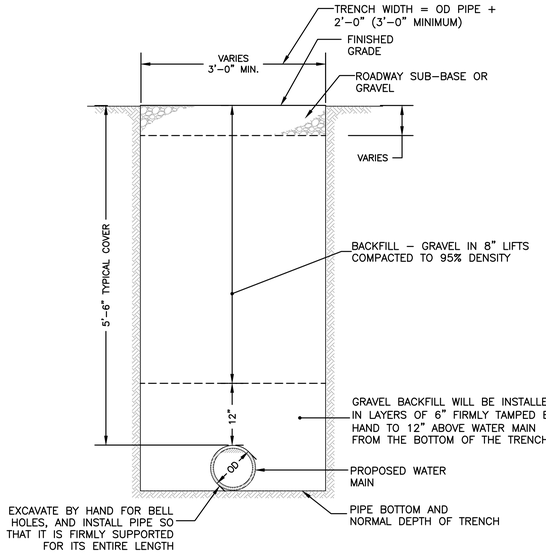

TRENCH DETAIL – WATER MAIN
NOT TO SCALE

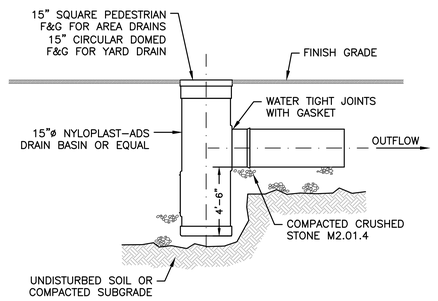

NOTE: STRUCTURE MUST BE ADEQUATE FOR H–10 MIN. LOADING

AREA AND YARD DRAIN
NOT TO SCALE

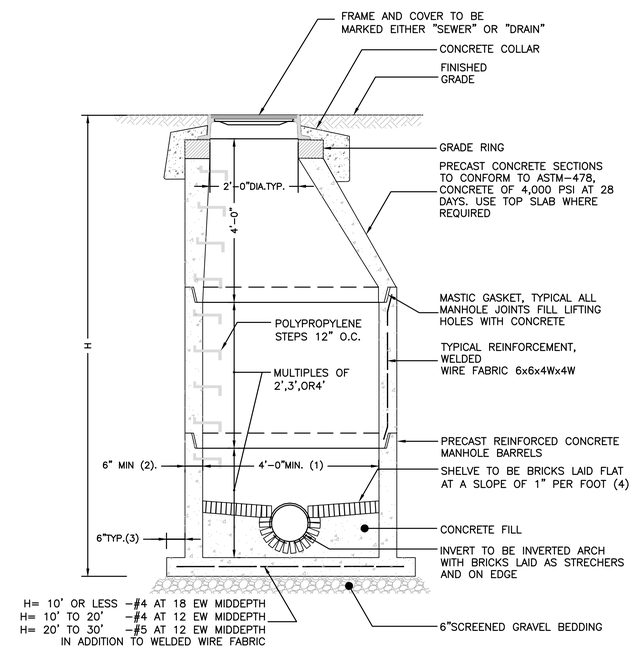

H= 10' OR LESS –#4 AT 18 EW MIDDEPTH
H= 10' TO 20' –#4 AT 12 EW MIDDEPTH
H= 20' TO 30' –#5 AT 12 EW MIDDEPTH
IN ADDITION TO WELDED WIRE FABRIC

NOTES:
1. 5'–0" DIAMETER FOR ALL MANHOLE DEPTHS GREATER THAN 20 FEET OR WHEN ORDERED BY THE ENGINEER.
2. 6 INCH MIN. WALL THICKNESS AND 7 INCH MIN. BASE THICKNESS WITH 5'–0" DIAMETER MANHOLES.
3. 6 INCH LIP OPTIONAL UNLESS OTHERWISE NOTED. CONCRETE INVERT AND SHELF MAY BE SUBSTITUTED IN STORM DRAIN MANHOLES AS DIRECTED BY THE ENGINEER.

PRECAST CONCRETE MANHOLE
NOT TO SCALE

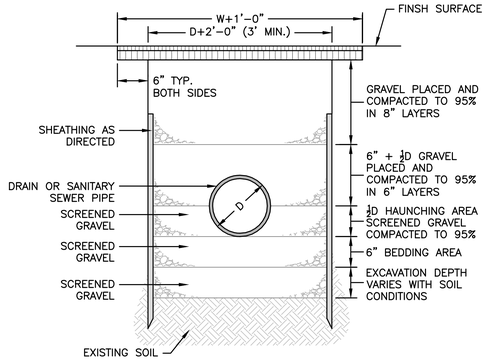

TRENCH DETAIL – DRAIN & SANITARY SEWER
NOT TO SCALE

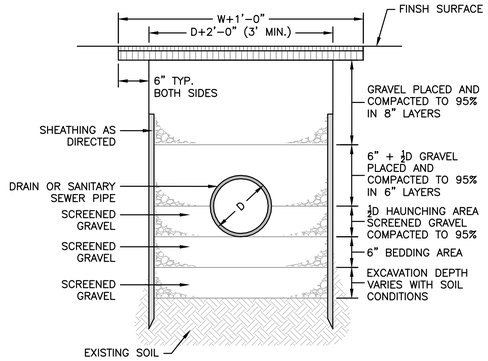

TRENCH DETAIL – DRAIN & SANITARY SEWER
NOT TO SCALE

HOWARD STEIN HUDSON
11 Beacon Street, Suite 1010
Boston, MA 02108
www.hshassoc.com

PREPARED FOR:

AVALONBAY COMMUNITIES, INC.
51 SLEEPER STREET, SUITE 750
BOSTON, MA 02210

AVALON HINGHAM SHIPYARD II
319 LINCOLN STREET
HINGHAM, MA 02043
PLYMOUTH COUNTY

REVISIONS:

NO	BY	DATE	DESCRIPTION
1	HH	2/25/16	SUPPLEMENTAL INFO
2	HH	3/30/16	SUPPLEMENTAL INFO

REGISTERED PROFESSIONAL ENGINEER
3/30/16

COMPREHENSIVE PERMIT APPLICATION

PRELIMINARY SITE DETAILS

DATE:	2/12/16
PROJECT NUMBER:	2015151
DESIGNED BY:	HH
DRAWN BY:	HH
CHECKED BY:	RL

C4.01

3/30/2016 L:\15151\Current\Civil\sheets\Site Details.dwg

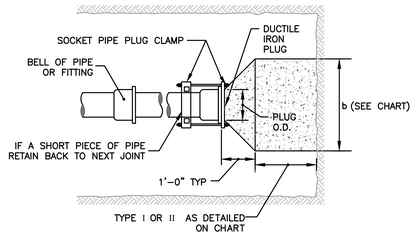

PLAN – DEAD END

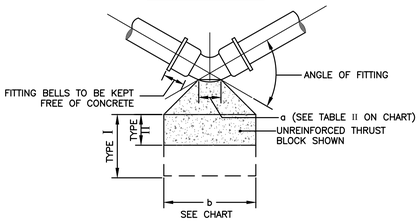

PLAN – BEND

TABLE II - "a" DIMENSION - FEET		
PIPE DIAMETER - INCHES	90° FITTING	OTHERS
6, 8, 10 & 12	1'-6	1'-0
16 & 20	2'-6	1'-6
24"-30"	3'-0	2'-0

TABLE I - THRUST - KIPS (WATER PRESSURE = 200 P.S.I.)										
PIPE DIAMETER - INCHES	6	8	10	12	16	20	24	30	36	42
DEAD ENDS AND TEES	5.6	10	15.8	22.6	40.2	62.8	90.4	141.0	203.6	277.0
ANGLE FITTINGS 90°	7.9	14.2	22.4	32.0	56.8	88.8	127.7	199.0	288.0	392.0
87 1/2°	-	11.1	17.6	25.1	44.7	70.0	100.2	157.0	226.0	308.0
56 1/4°	-	-	14.9	21.2	37.9	59.2	85.1	133.0	192.0	261.0
45°	-	-	-	17.3	30.8	48.1	69.0	108.0	156.0	212.0
33 3/4°	-	-	-	13.1	23.3	36.5	52.5	82.0	118.0	161.0
22 1/2°	-	-	-	8.8	15.7	24.5	35.2	55.0	79.5	108.0

DESIGN THRUST BLOCKS OR OTHER SUITABLE ANCHORAGE TO SUIT ACTUAL CONDITIONS

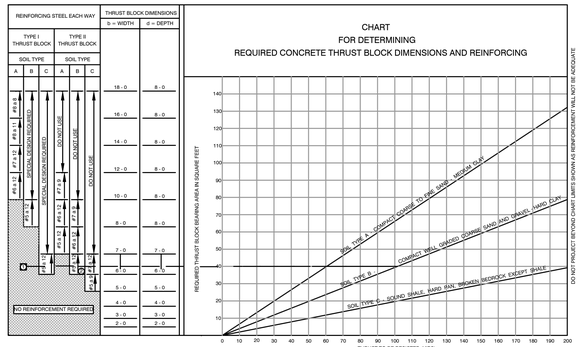

THRUST BLOCK
NOT TO SCALE

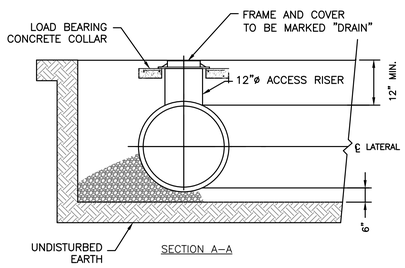

SECTION A–A

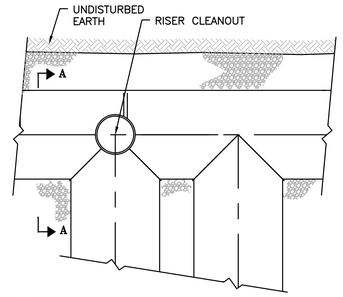

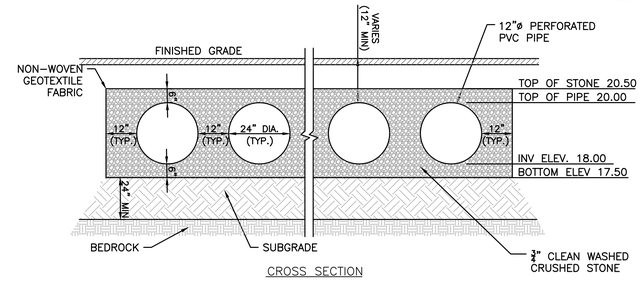

CROSS SECTION

SUBSURFACE STORMWATER INFILTRATION SYSTEM
NOT TO SCALE

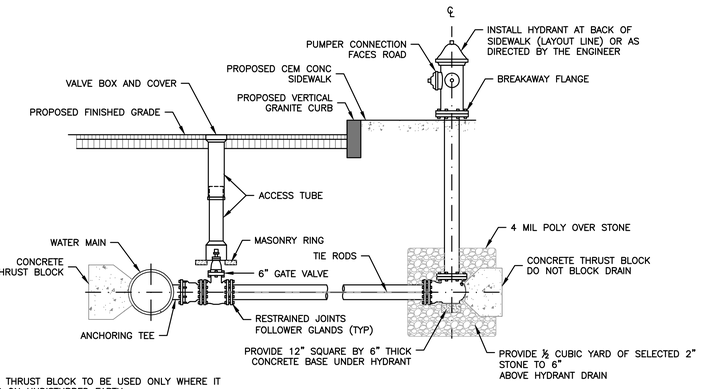

NOTES:

1. CONCRETE THRUST BLOCK TO BE USED ONLY WHERE IT WILL BEAR ON UNDISTURBED EARTH.
2. USE RESTRAINED JOINT FOLLOWER GLANDS OR TIE RODS WHERE CONCRETE THRUST BLOCK IS UNACCEPTABLE.
3. SIZE OF BLOCK OR FITTING TO BE DESIGNED FOR SPECIFIC CONDITIONS, OR ANY NECESSARY BENDS.

HYDRANT
NOT TO SCALE

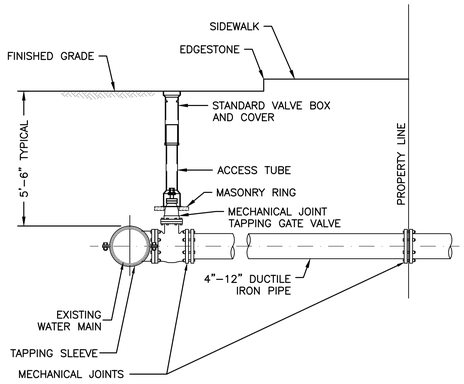

NOTES:

1. CONCRETE THRUST BLOCK TO BE USED ONLY WHERE IT WILL BEAR ON UNDISTURBED EARTH.
2. USE RESTRAINED JOINT FITTINGS OR TIE RODS WHERE CONCRETE THRUST BLOCK IS UNACCEPTABLE.
3. SIZE OF BLOCK OR MEGALUG TO BE DESIGNED FOR SPECIFIC CONDITIONS.

TAPPING SLEEVE & VALVE
NOT TO SCALE

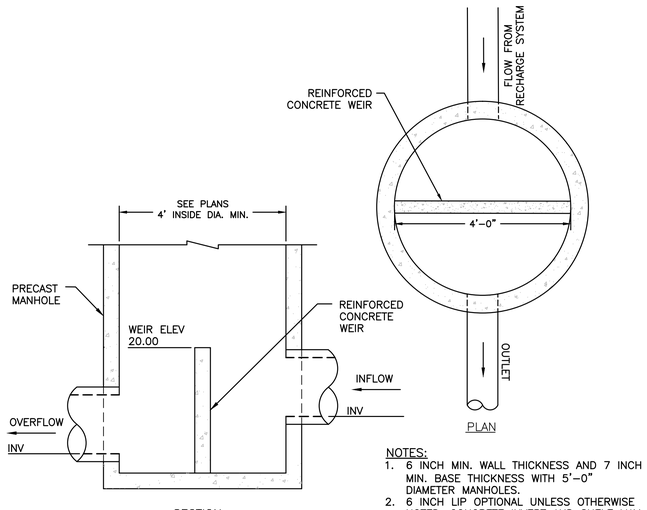

SECTION

PLAN

OUTLET CONTROL STRUCTURE
NOT TO SCALE

NOTES:

1. 6 INCH MIN. WALL THICKNESS AND 7 INCH MIN. BASE THICKNESS WITH 5'–0" DIAMETER MANHOLES.
2. 6 INCH LIP OPTIONAL UNLESS OTHERWISE NOTED. CONCRETE INVERT AND SHELF MAY BE SUBSTITUTED IN STORM DRAIN MANHOLES AS DIRECTED BY THE ENGINEER.
3. CONTRACTOR TO SUBMIT METHOD OF BRACING WEIR.

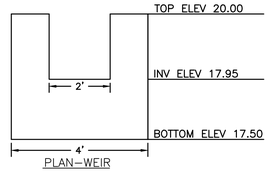

PLAN–WEIR

HOWARD STEIN HUDSON
11 Beacon Street, Suite 1010
Boston, MA 02108
www.hshassoc.com

PREPARED FOR:

AVALONBAY COMMUNITIES, INC.
51 SLEEPER STREET, SUITE 750
BOSTON, MA 02210

AVALON HINGHAM SHIPYARD II

319 LINCOLN STREET
HINGHAM, MA 02043
PLYMOUTH COUNTY

REVISIONS:

NO	BY	DATE	DESCRIPTION

COMPREHENSIVE PERMIT APPLICATION

PRELIMINARY SITE DETAILS

DATE:	3/30/16
PROJECT NUMBER:	2015151
DESIGNED BY:	HH
DRAWN BY:	HH
CHECKED BY:	RL

C4.02

3/30/2016 L:\15151\Current\Cad\Sheets\Site Details.dwg

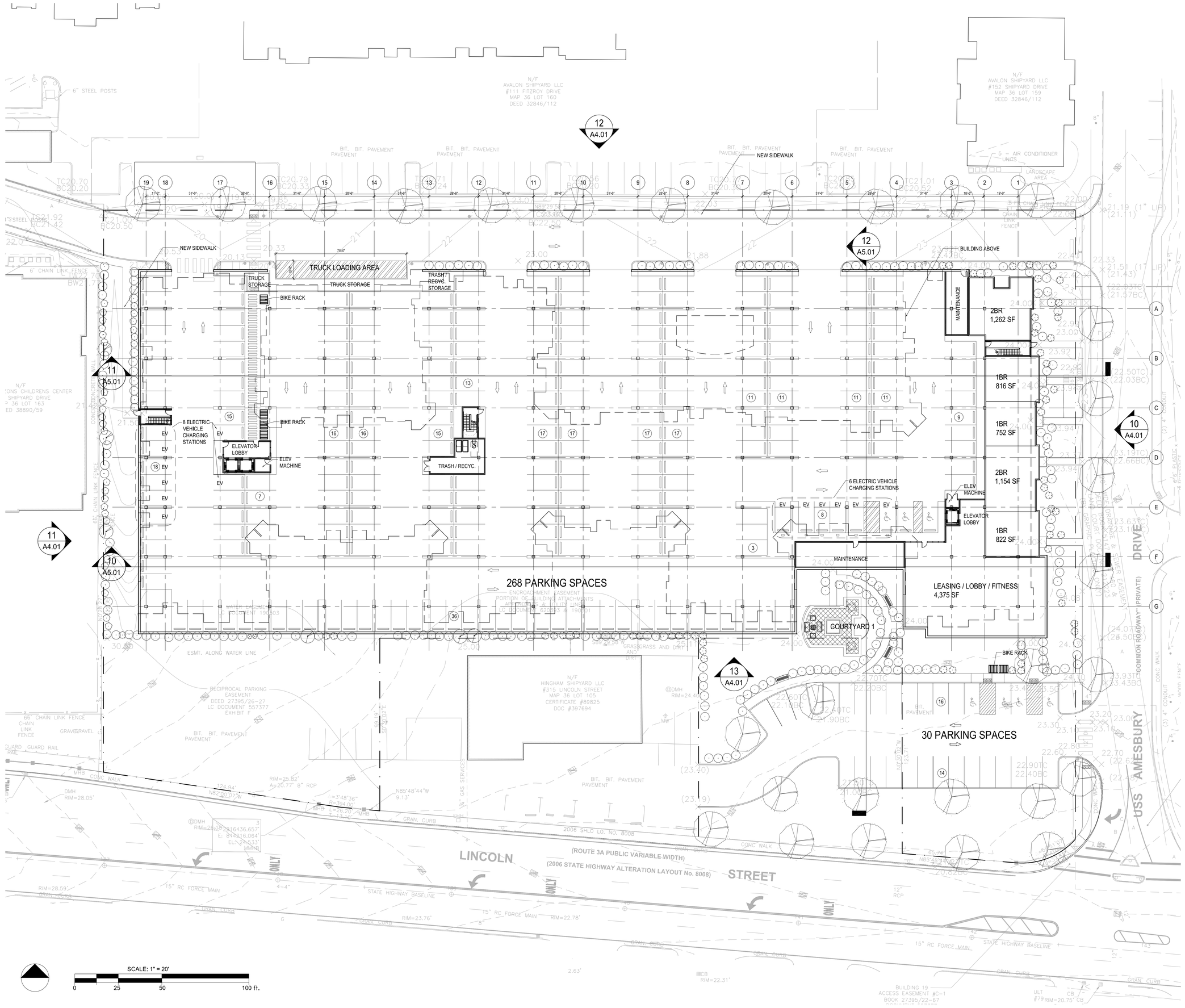

Wednesday, March 30, 2016 11:12:09 AM
P:\15030.00 - Avalon Hingham Shipyard\Drawings\Preliminary\2016-03-28_Typical Floor Plan.dwg

tat | the architectural team

The Architectural Team, Inc.
50 Commandant's Way at Admiral's Hill
Chelsea MA 02150
T 617.889.4402
F 617.884.4329
www.architecturalteam.com

©2011 The Architectural Team, Inc.

Consultant:

Revision:

Architect of Record:

Drawn: Y.Y.

Checked: E.B.

Scale: 1" = 20' -0"

Key Plan:

Project Name:
Avalon Hingham Shipyard II

Hingham, MA

Sheet Name:
Ground Floor Plan

Project Number:
15030

Issue Date:
March 30, 2016

Sheet Number:
A1.01

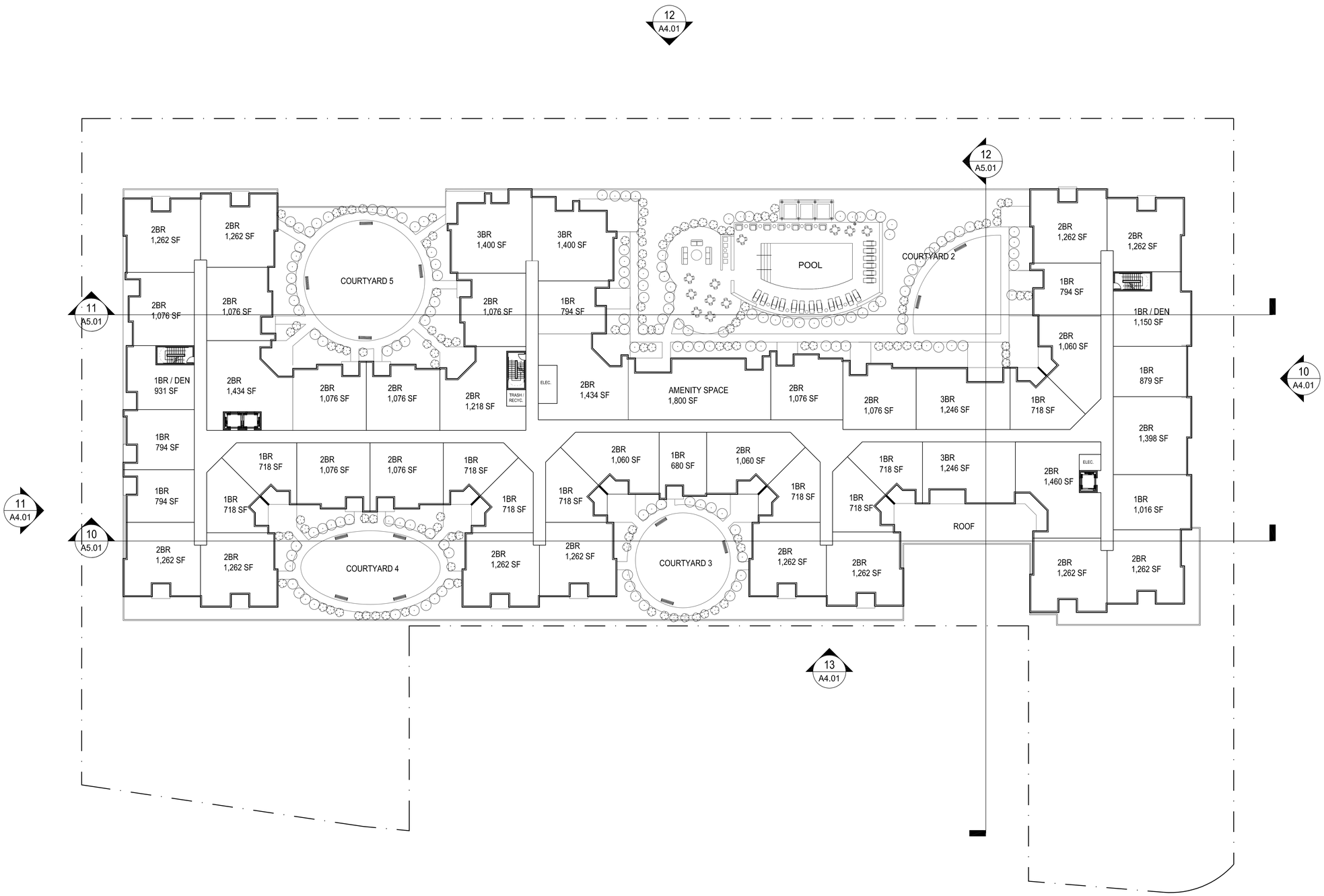

tat | the architectural team

The Architectural Team, Inc.
50 Commandant's Way at Admiral's Hill
Chelsea MA 02150
T 617.889.4402
F 617.884.4329
www.architecturalteam.com

©2011 The Architectural Team, Inc.

Consultant:

Revision:

Architect of Record:

Drawn: Y.Y.

Checked: E.B.

Scale: 1" = 20' -0"

Key Plan:

Project Name:
Avalon Hingham Shipyard II

Hingham, MA

Sheet Name:
Seond Floor Plan

Project Number:
15030

Issue Date:
March 30, 2016

Sheet Number:
A1.02

Wednesday, March 30, 2016 11:14:18 AM
P:\15030.00 - Avalon Hingham Shipyard\Drawings\Preliminary\2016-03-28_ Typical Floor Plan.dwg

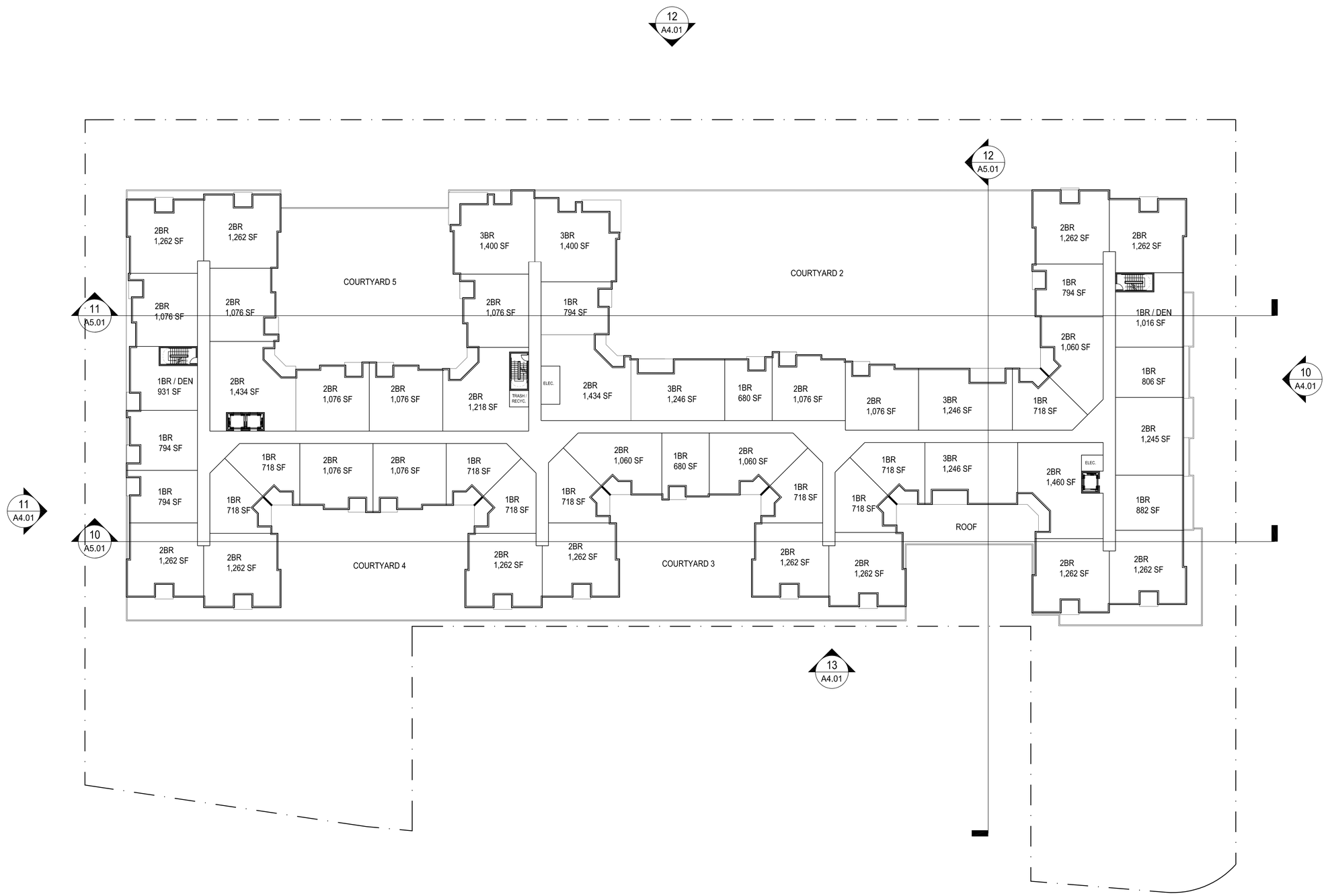

SCALE: 1" = 20'

0 25 50 100 ft.

Wednesday, March 30, 2016 11:15:13 AM
P:\15030.00 - Avalon Hingham Shipyard\Drawings\Preliminary\2016-03-28_Typical Floor Plan.dwg

tat | the architectural team

The Architectural Team, Inc.
50 Commandant's Way at Admiral's Hill
Chelsea MA 02150
T 617.889.4402
F 617.884.4329
www.architecturalteam.com

©2011 The Architectural Team, Inc.

Consultant:

Revision:

Architect of Record:

Drawn: Y.Y.

Checked: E.B.

Scale: 1" = 20' -0"

Key Plan:

Project Name:
Avalon Hingham Shipyard II

Hingham, MA

Sheet Name:
Third Floor Plan

Project Number:
15030

Issue Date:
March 30, 2016

Sheet Number:
A1.03

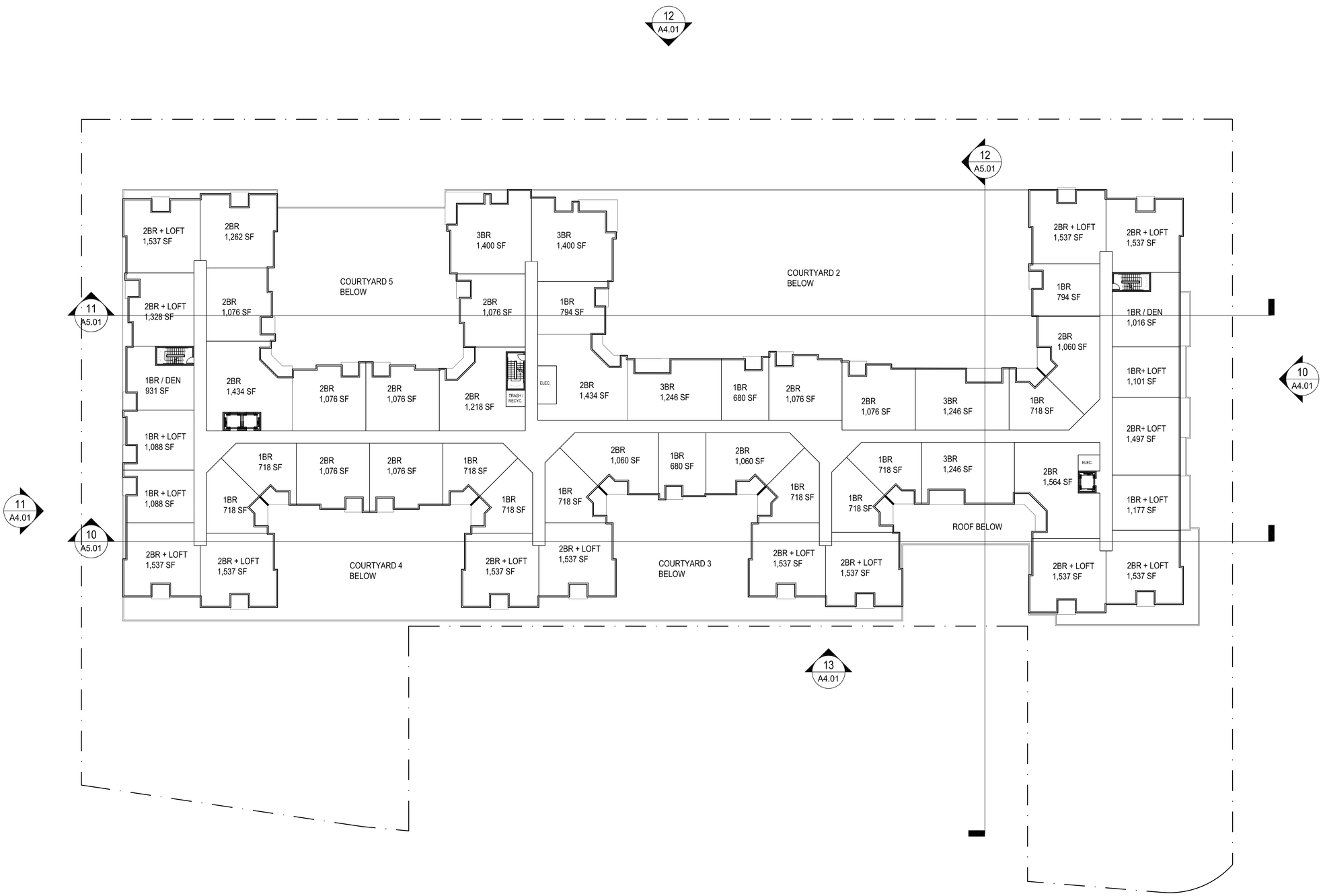

Wednesday, March 30, 2016 11:15:40 AM
P:\15030.00 - Avalon Hingham Shipyard\Drawings\Preliminary\2016-03-28_ Typical Floor Plan.dwg

tat | the architectural team

The Architectural Team, Inc.
50 Commandant's Way at Admiral's Hill
Chelsea MA 02150
T 617.889.4402
F 617.884.4329
www.architecturalteam.com

©2011 The Architectural Team, Inc.

Consultant:

Revision:

Architect of Record:

Drawn: Y.Y.

Checked: E.B.

Scale: 1" = 20' -0"

Key Plan:

Project Name:
Avalon Hingham Shipyard II

Hingham, MA

Sheet Name:
Fourth Floor Plan

Project Number:
15030

Issue Date:
March 30, 2016

Sheet Number:
A1.04

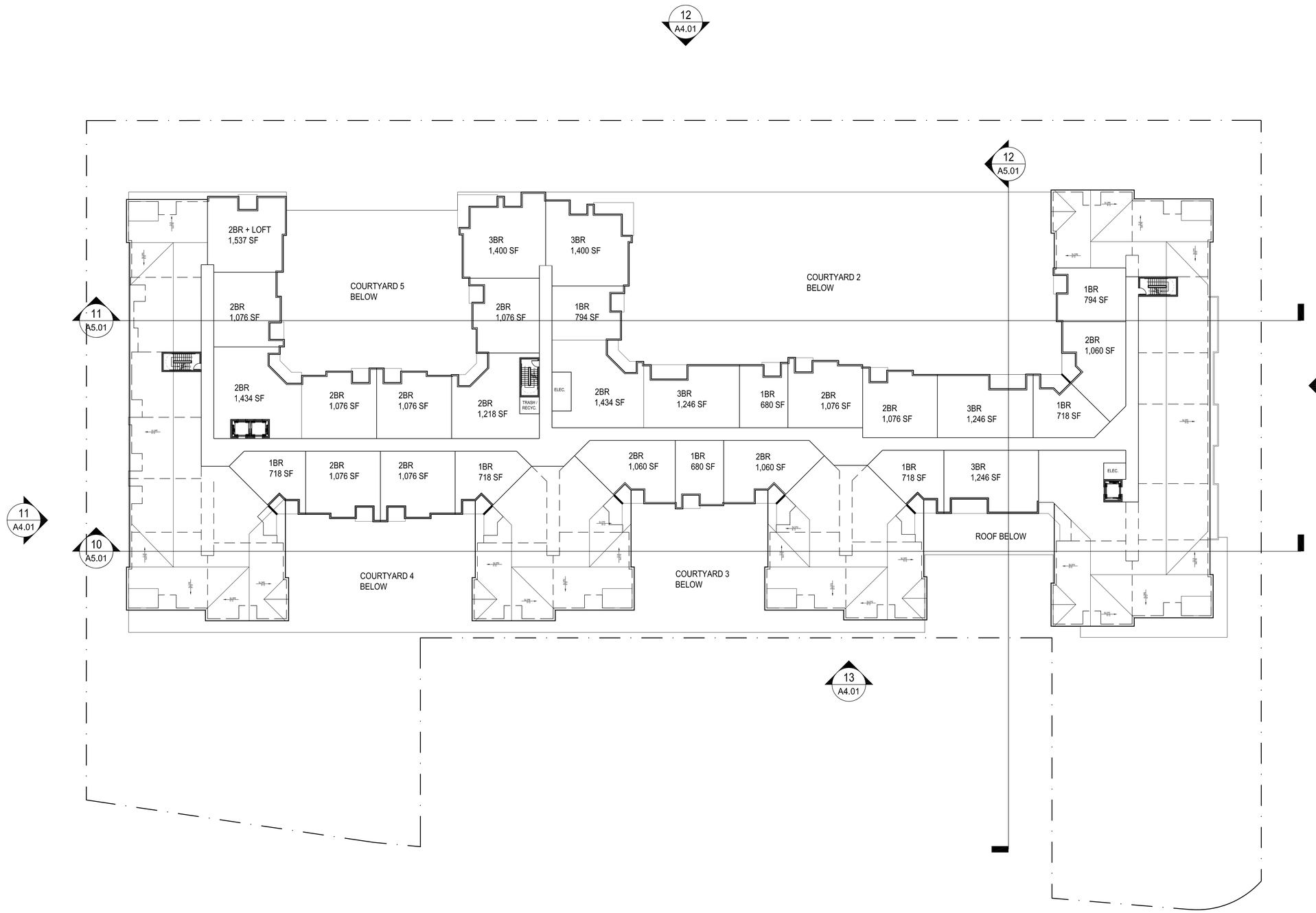

Wednesday, March 30, 2016 11:16:22 AM
P:\15030.00 - Avalon Hingham Shipyard\Drawings\Preliminary\2016-03-28_ Typical Floor Plan.dwg

tat | the architectural team

The Architectural Team, Inc.
50 Commandant's Way at Admiral's Hill
Chelsea MA 02150
T 617.889.4402
F 617.884.4329
www.architecturalteam.com

©2011 The Architectural Team, Inc.

Consultant:

Revision:

Architect of Record:

Drawn: Y.Y.

Checked: E.B.

Scale: 1" = 20' -0"

Key Plan:

Project Name:
Avalon Hingham Shipyard II

Hingham, MA

Sheet Name:
Fifth Floor Plan

Project Number:
15030

Issue Date:
March 30, 2016

Sheet Number:
A1.05

MATERIAL KEY:

1. ASPHALT SHINGLE ROOF
2. PAINTED FIBER CEMENT, VINYL OR EQUAL
3. ACCENT PANEL SYSTEM - PAINTED FIBER CEMENT, METAL PANEL OR EQUAL
4. CANOPY
5. VINYL WINDOW
6. ALUMINUM BALCONY GUARDRAIL
7. BRICK VENEER
8. ALUMINUM STOREFRONT

KEY PLAN:

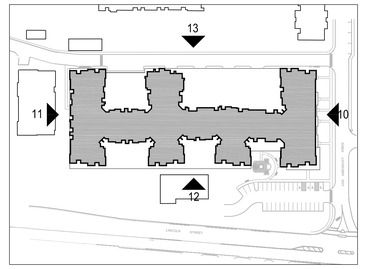

13 NORTH ELEVATION
SCALE: 1" = 20'-0"

12 SOUTH ELEVATION
SCALE: 1" = 20'-0"

11 WEST ELEVATION
SCALE: 1" = 20'-0"

10 EAST ELEVATION
SCALE: 1" = 20'-0"

tat | the architectural team

The Architectural Team, Inc.
50 Commandant's Way at Admiral's Hill
Chelsea MA 02150
T 617.889.4402
F 617.884.4329
www.architecturalteam.com

©2011 The Architectural Team, Inc.

Consultant:

Revision:

Architect of Record:

Drawn: Y.Y.

Checked: E.B.

Scale: 1" = 20' -0"

Key Plan:

Project Name:
Avalon Hingham Shipyard II

Hingham, MA

Sheet Name:
Exterior Elevations

Project Number:
15030

Issue Date:
March 30, 2016

Sheet Number:
A4.01

Wednesday, March 30, 2016 11:27:49 AM
P:\15030.00 - Avalon Hingham Shipyard\Drawings\Preliminary\2016-03-30_Exterior Perspective Views.dwg

10 VIEW LOOKING NORTH FROM USS AMESBURY DRIVE
SCALE: NOT TO SCALE

KEY PLAN:

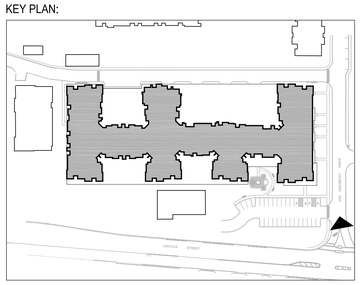

tat | the architectural team

The Architectural Team, Inc.
50 Commandant's Way at Admiral's Hill
Chelsea MA 02150
T 617.889.4402
F 617.884.4329
www.architecturalteam.com

©2011 The Architectural Team, Inc.

Consultant:

Revision:

Architect of Record:

Drawn: Y.Y.

Checked: E.B.

Scale: NOT TO SCALE

Key Plan:

Project Name:
Avalon Hingham Shipyard II

Hingham, MA

Sheet Name:
Exterior Perspective View

Project Number:
15030

Issue Date:
March 30, 2016

Sheet Number:
A4.02

Wednesday, March 30, 2016 11:25:06 AM
P:\15030.00 - Avalon Hingham Shipyard\Drawings\Preliminary\2016-03-30_Exterior Perspective Views.dwg

10 VIEW LOOKING SOUTH FROM USS AMESBURY DRIVE
SCALE: NOT TO SCALE

KEY PLAN:

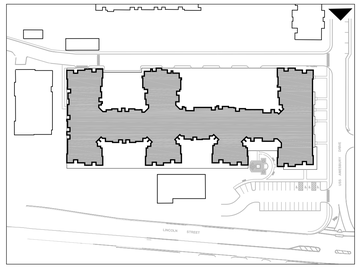

tat | the architectural team

The Architectural Team, Inc.
50 Commandant's Way at Admiral's Hill
Chelsea MA 02150
T 617.889.4402
F 617.884.4329
www.architecturalteam.com

©2011 The Architectural Team, Inc.

Consultant:

Revision:

Architect of Record:

Drawn: Y.Y.

Checked: E.B.

Scale: NOT TO SCALE

Key Plan:

Project Name:
Avalon Hingham Shipyard II

Hingham, MA

Sheet Name:
Exterior Perspective View

Project Number:
15030

Issue Date:
March 30, 2016

Sheet Number:
A4.03

Wednesday, March 30, 2016 11:25:47 AM
P:\15030.00 - Avalon Hingham Shipyard\Drawings\Preliminary\2016-03-30_Exterior Perspective Views.dwg

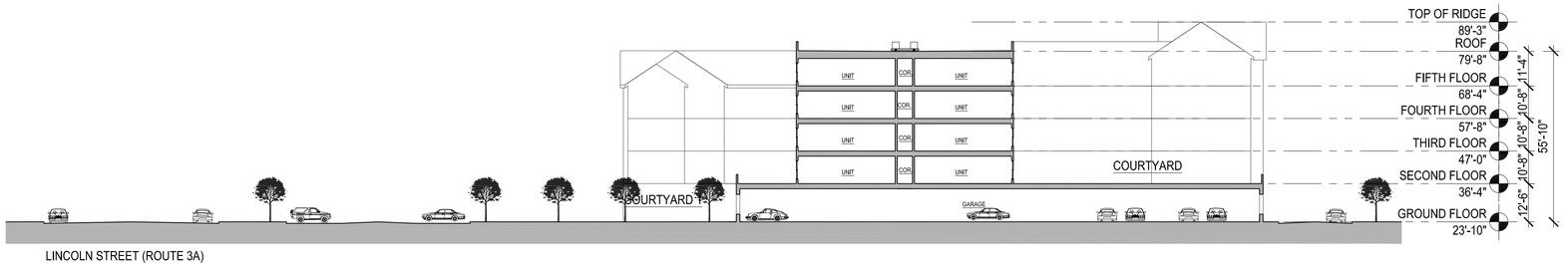

12 BUILDING SECTION
SCALE: 1" = 20'-0"

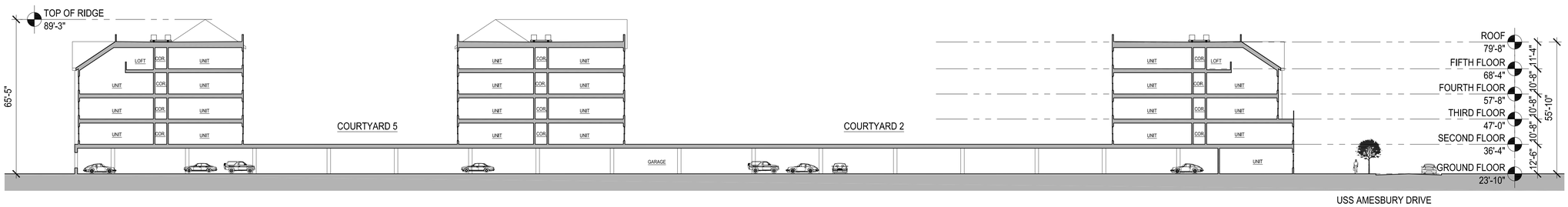

11 BUILDING SECTION
SCALE: 1" = 20'-0"

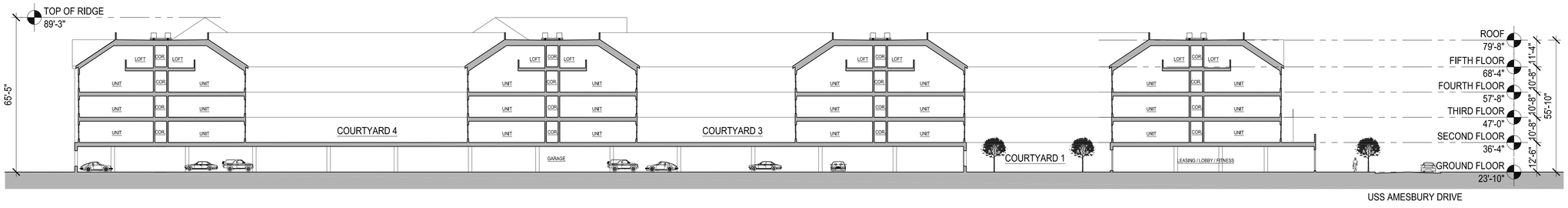

10 BUILDING SECTION
SCALE: 1" = 20'-0"

KEY PLAN:

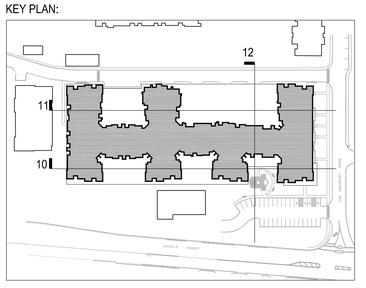

tat
the architectural team

The Architectural Team, Inc.
50 Commandant's Way at Admiral's Hill
Chelsea MA 02150
T 617.889.4402
F 617.884.4329
www.architecturalteam.com
©2011 The Architectural Team, Inc.

Consultant:

Revision:

Architect of Record:

Drawn: Y.Y.

Checked: E.B.

Scale: 1" = 20' -0"

Key Plan:

Project Name:
Avalon Hingham Shipyard II

Hingham, MA

Sheet Name:
Building Sections

Project Number:
15030

Issue Date:
March 30, 2016

Sheet Number:
A5.01

Wednesday, March 30, 2016 11:21:14 AM
P:\15030.00 - Avalon Hingham Shipyard\Drawings\Preliminary\2016-03-30_Exterior Perspective Views.dwg

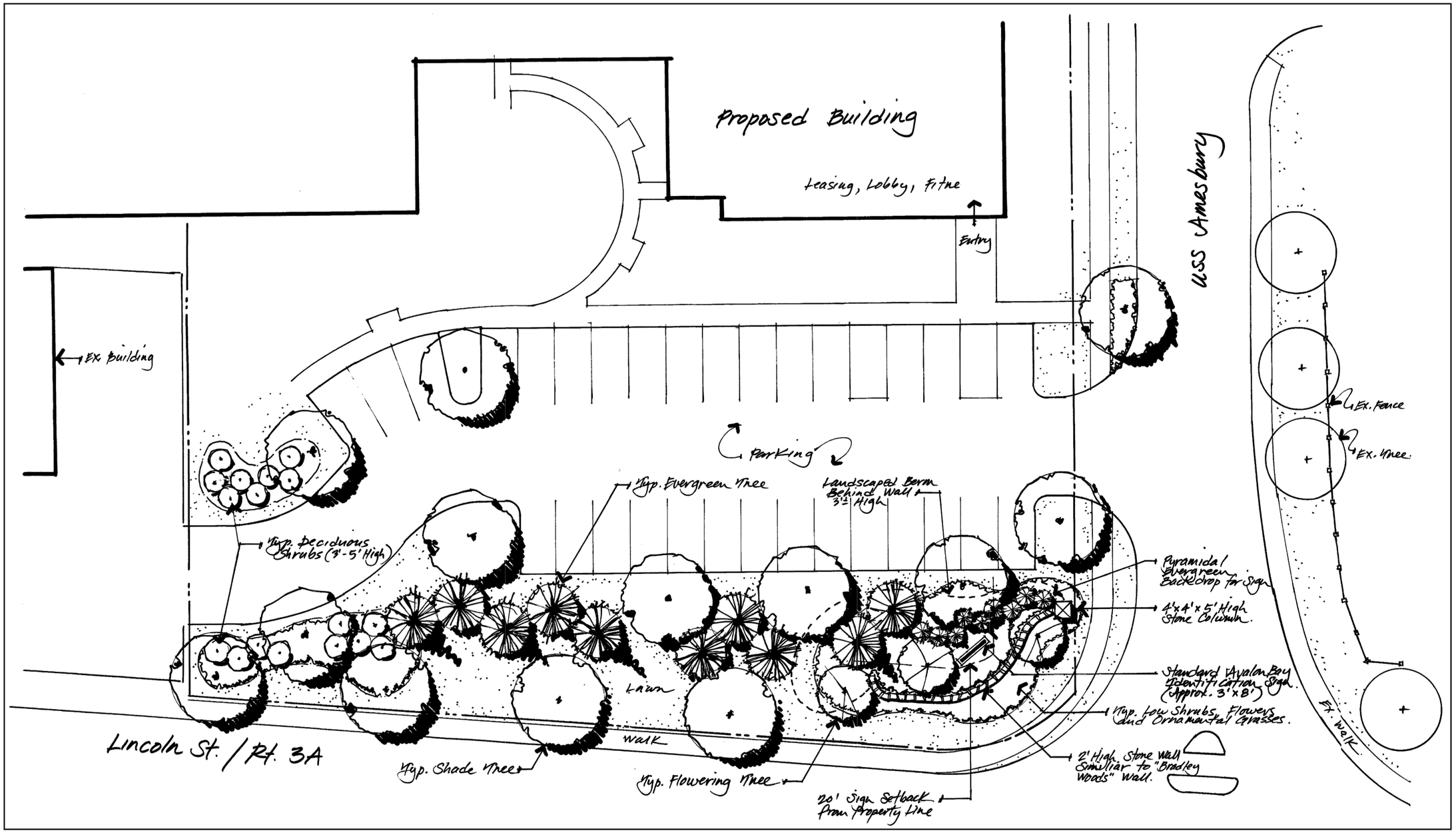

Conceptual Entrance Landscape Plan
Scale: 1" = 10'-0"

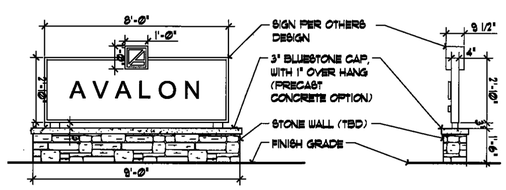

Entrance Sign Detail
Scale: 3/8" = 1'-0"

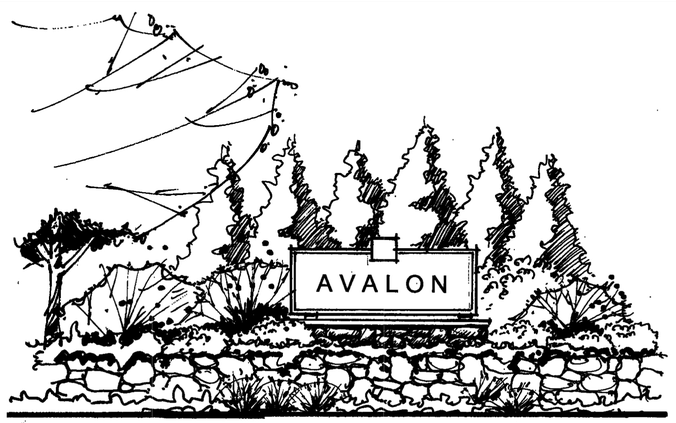

Entrance Signage Landscape Sketch
Not to Scale

Hawk Design, Inc.
Landscape Architecture
Land Planning
Sagamore, MA
508-833-8800
info@hawkdesigninc.com

HAWK DESIGN, INC. 2016

THIS DRAWING AND ALL INFORMATION CONTAINED HEREON IS PROPRIETARY INFORMATION OF HAWK DESIGN, INC. AND MAY NOT BE COPIED OR REPRODUCED, EITHER IN WHOLE OR IN PART, BY ANY METHOD, WITHOUT WRITTEN PERMISSION OF HAWK DESIGN, INC.

Date: 3/30/16

Revisions:
Num. Date Description

Avalon Hingham Shipyard II
Hingham, Massachusetts
Prepared for: AvalonBay Communities, Inc., 51 Sleeper Street, Suite 750, Boston, MA

Drawn By: TM | Checked By: BNL

Conceptual Entrance Landscape Plan

Scale: As Noted

Sheet: **L1**